PÁDLOVÝ HLÍDAČ PRŮTOKU
UR1-...G

Flow Switch
UR1-...GM / GK / AP

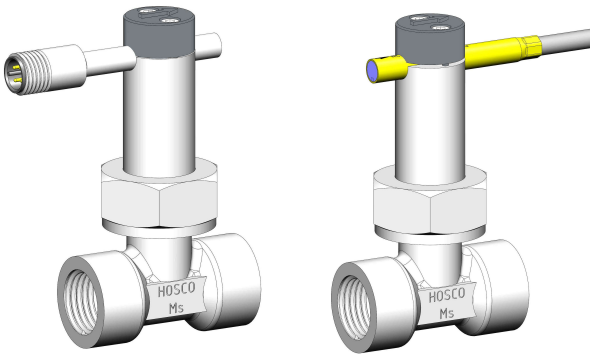

- **Low pressure loss**
- **Compact design**
- **Threaded connection**

Characteristics

The devices function via the principle of a spring-supported paddle, and the magnetic triggering of a reed switch.

Technical data

Switch	reed switch	
Nominal width	DN 10..50	
Process connections	Brass stainless steel POM	female thread G3/8..G2 female thread G3/8..G2 male thread G1/2
Switching range	1.3..53 l/min	for details see table "Ranges"
$Q_{max.}$	to 150 l/min	
Tolerance	±15 % of full scale value	
Pressure rating	Housing brass Housing s.s. Housing POM	PN 25 PN 25 PN 10
Medium temperature	Brass version S.S. version with housing POM	-20..+110°C -20..+110°C -20..+ 80°C
Ambient temperature	-20..+70 °C	
Media	water (oils, gases and aggressive media available on request)	
Electrical data	see "UR1 brass switching unit"	
Materials medium-contact	*Brass construction*: CW713R nickelplated CW614N nickelplated 1.4310, 1.4301, hard ferrite, NBR *Optional:* Housing made of POM G ½ male thread (PN 10)	*Stainless steel construction*: 1.4305, 1.4571, 1.4310, 1.4310, hard ferrite PTFE-coated, FKM
Non-medium-contact materials	see "UR1 brass switching unit"	
Weight	see table "Dimensions and weights"	
Installation location	Standard: horizontal inwards flow; switching unit not recommended underneath; other installation positions are possible; the installation position affects the switching point and switch range	

UR1 Brass switching unit

Wiring	normally open (n.o.) or normally closed (n.c.),no. 0.225 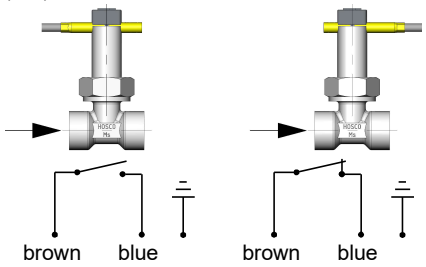
Switching voltage	max. 230 V AC
Switching current	max. 1 A
Switching capacity	max. 50 VA
Protection class	1 - PE connection
Ingress protection	IP 65
Electrical connection	cable 1.5 m, optionally for round plug connector M12x1, 4-pole
Materials, non-medium-contact	CW614N, nickelled, CW614N, NBR, POM

Ranges

Details in the table correspond to horizontal inwards flow with decreasing flow rate.

G	DN	Switching range l/min H_2O	Types	$Q_{max.}$ recommended
G 3/8	DN 10	2.5 - 3.5	UR.-010G.	10
G 1/2 male	DN 15	1.3 - 2.1	UR.-015AP	10
G 1/2	DN 15	4.0 - 4.5	UR.-015G.	20
G 3/4	DN 20	5.0 - 6.0	UR.-020G.	40
G 1	DN 25	9.5 - 11.5	UR.-025G.	60
G 1 1/4	DN 32	13.5 - 17.5	UR.-032G.	80
G 1 1/2	DN 40	30.0 - 38.0	UR.-040G.	100
G2	DN 50	42,0 – 53,0	UR.-050G.	150

Special ranges are available.

Dimensions and weights

G	Types	H	L	X	Weight kg
G 3/8	UR1-010GM	82	50	10	0.35
	UR1-010GK				0.40
G 1/2 male	UR1-015AP		60	12	0.15
G 1/2	UR1-015GM		50	10	0.35
	UR1-015GK				0.40
G 3/4	UR1-020GM	83		12	0.35
	UR1-020GK				0,35
G 1	UR1-025GM	87			0.40
	UR1-025GK				0.45
G 1 1/4	UR1-032GM	91			0,45
	UR1-032GK				0.50
G 1 1/2	UR1-040GM	94			0.55
	UR1-040GK				0.65
G 2	UR1-050GM	103			0.80
	UR1-050GK				0.95

PÁDLOVÝ HLÍDAČ PRŮTOKU UR1-...G

UR1 mit Stecker M12x1

UR1

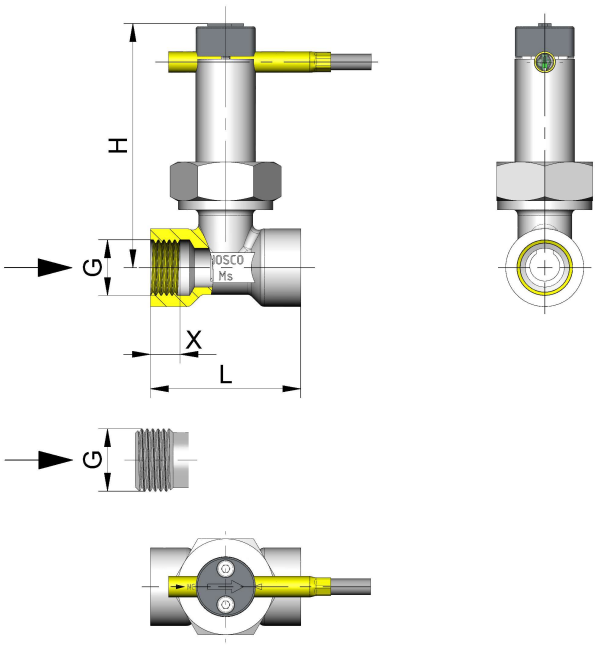

Handling and operation

Note

- Include straight calming section of 5 x DN in inlet and outlet
- Include a filter if the media are dirty (use magnetic filter for ferritic particles).
- It must be ensured that the values given for voltage, current, and power are not exceeded.
- When switched on, a load must be connected in series.
- The electrical details apply to ohmic loads. Capacitive, inductive and lamp loads must be operated using a protective circuit.

Adjustment

Loosen the screws on the claming plate, move the contact tube to the required position, tighten the screws again.
“Normally closed” or “normally open” acc. to the technical data table.

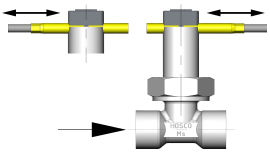

Ordering code

	1.		2.	3.	4.	5.
UR -	1	-				

❍=Option

1.	**Switching unit**					
	1	brass				
2.	**Nominal width**					
	010	DN 10 - G $^3/_8$	●		●	
	015	DN 15 - G $^1/_2$	●		●	
		DN 15 - G $^1/_2$ male				●
	020	DN 20 - G $^3/_4$	●		●	
	025	DN 25 - G 1	●		●	
	032	DN 32 - G $1^1/_4$	●		●	
	040	DN 40 - G $1^1/_2$	●		●	
	050	DN 50 - G 2	●		●	
3.	**Process connection**					
	G	female thread	●		●	
	A	male thread				●
4.	**Connection material**					
	M	brass				
	K	stainless steel				
	P	POM (PN 10)				
5.	**Switching unit options**					
	A	for switching unit ATEX A-U1.1 The switching head is a separte article, which needs to be ordered in addition.				
	S ❍	for round plug connector M12x1, 4-pole				

Options

- Switching ranges for oil or gas
- Special switching ranges/set points
- Soldered copper fitting
- round plug connector M12x1, 4-pole
- for media temperature up to 150°C

Ordering information

- Specify direction of flow, medium, and switching range
- For oils, state viscosity, temperature and designation (e.g. ISO VG 68) (enquire about range).
- For gases, state pressure (relative or absolute), temperature and medium (e.g. air) (ranges on request).